FÉDÉRATION INTERNATIONALE
DE MOTOCYCLISME

FIM World Championship Grand Prix

Self-certification form for rider's equipment

RETURN TO & FOR MORE INFORMATION:

MotoGP Technical Director
DANNY ALDRIDGE
danny@irta.org.uk

FIM Racing Homologation Programme
frhp@fim.ch

The Manufacturer	
Manufacturer's name	REWIN
Manufacturer's address (country)	VIA ANDRIANI 8
Manufacturer's address (city)	COLCERESA
Manufacturer's address (road)	VI
Manufacturer's address (ZIP code)	36064
Manufacturer's representative (last name, name)	CHIARA LUNARDON
Manufacturer's representative (e-mail)	c.lunardon@rewin.it
Manufacturer's representative (telephone)	349.2739616

Equipment information	
Description of clothing (eg. Race suit, boot, gloves)	RACER suit
Trademark, Design model, Part number	NAMI MODEL + AIR 1972/1
Test Certification number (generated by manufacturer)	All test report are included in document CE 1394200927 -00 - 00
Location of Design model / Part number	MANFREDI MOTO E 23 001

FOR SUIT MANUFACTURERS ONLY

Airbag information	
Airbag manufacturer	ALPINESTARS
Trademark, Model name, Part number	ALPINESTARS tech air 5
Test Certification number (generated by manufacturer)	Tech-Air 5_Assessment test report FIM_2022-04-5.
Location of Design model / Part number	tech air 5

The clothing manufacturer confirms that the above specification of rider's equipment is in conformity with the FIM MotoGP Technical Rules Art. 2.4.5.2, 2.5.5.2 and 2.6.5.2, current as at this date.

Clothing manufacturer's legal representative (see above)

CHIARA LUNARDON REWIN di Chiara Lunardon

Name

Signature

REWIN di Chiara Lunardon

On 30/05/23

A copy of this compliance certificate for each item of clothing must to be sent to the MotoGP Technical Director and to the FIM Racing Homologation Programme address mentioned here above.
A copy of this certificate should also be provided to each customer.

FÉDÉRATION INTERNATIONALE
DE MOTOCYCLISME

Pictures	
Rider's airbag (front side)	Rider's airbag (rear side)
Inflatable system	Back protector if present (EN 1621-2)
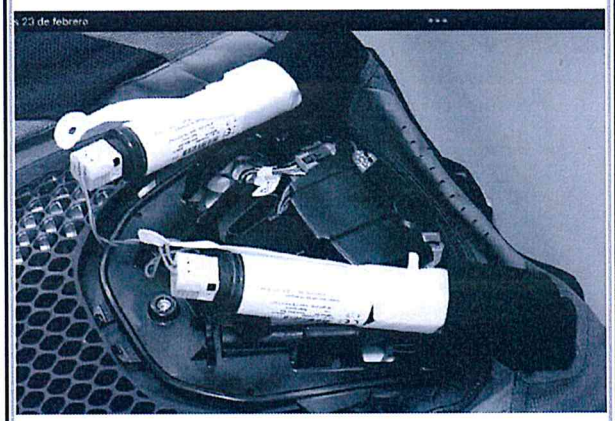	

REWIN di Chiara Lunardon

HEADQUARTERS 11 ROUTE DE SUISSE
CH – 1295 MIES
SWITZERLAND

TEL +41 22 950 95 00
FAX +41 22 950 95 01
INFO@FIM.CH
WWW.FIM-LIVE.COM

FOUNDED 1904

FÉDÉRATION INTERNATIONALE
DE MOTOCYCLISME

Airbag deployed (front side)	Airbag deployed (rear side)
Electronic Unit	**Label of airbag**
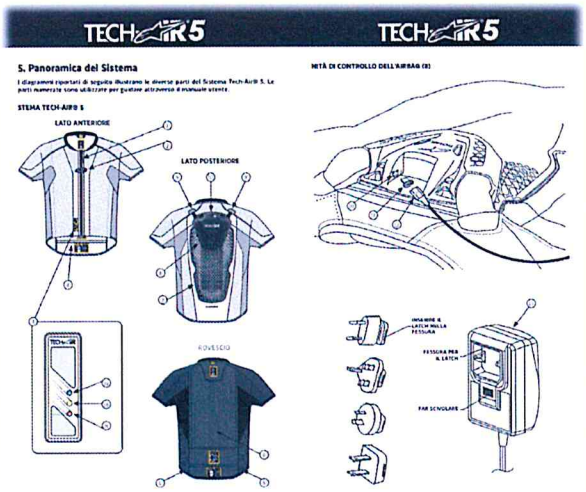	
	Label of leather suit

REWIN di Chiara Lunardon

HEADQUARTERS 11 ROUTE DE SUISSE
CH - 1295 MIES
SWITZERLAND

TEL +41 22 950 95 00
FAX +41 22 950 95 01
INFO@FIM.CH
WWW.FIM-LIVE.COM

FOUNDED 1904